TENNESSEE D.O.T.
DESIGN DIVISION

FILE NO.

TYPE	YEAR	PROJECT NO.	SHEET NO.
CONST.	2015	NH-29(86)	U2-13

MORGAN COUNTY   65001-3268-14

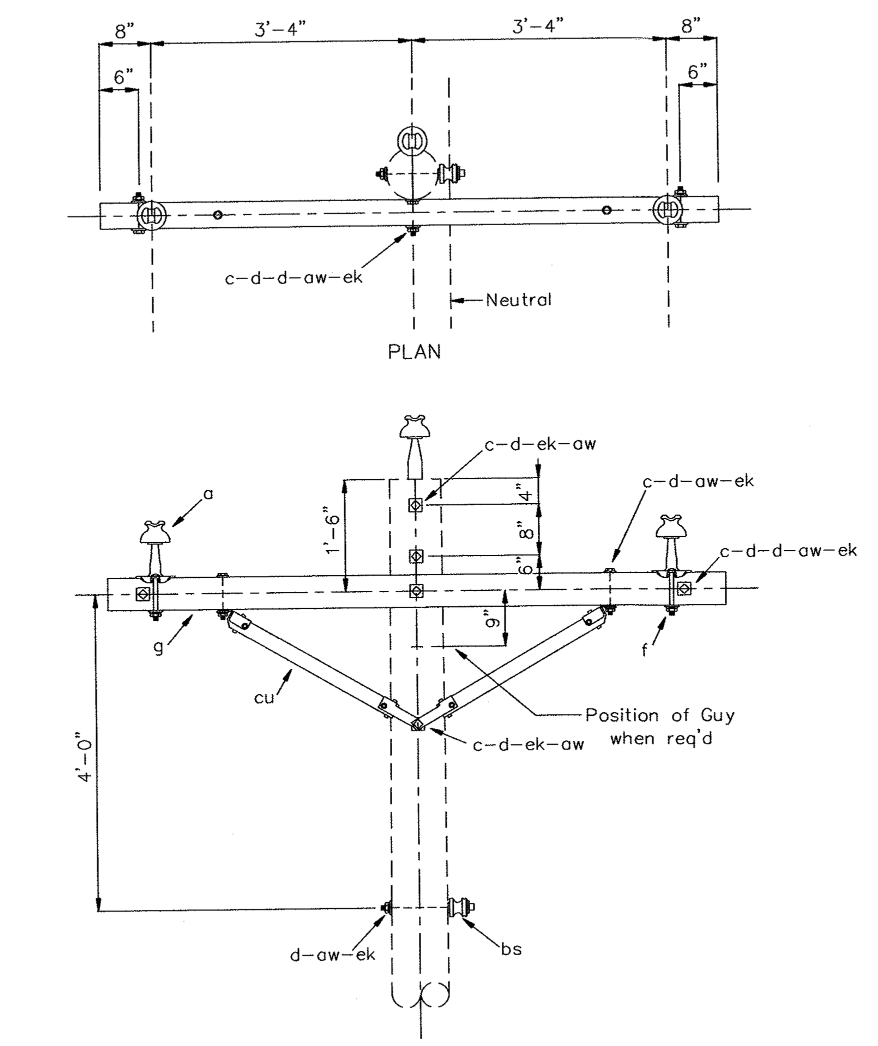

NOTES:

1- This construction required for all conductors having a breaking strength of more than 4500 pounds.

2- Maximum transverse load is 500 lbs. per conductor

QUANTITY 15kV	QUANTITY 25kV	DESCRIPTION
3	3	Insulator, Pin Type
1	1	Pin, Pole Top, 20"
2	2	Bolt, Machine, 1/2" x Required Length
6	6	Bolt, Machine, 5/8" x Required Length
2	2	Washer, 1 3/8" Square With 9/16" Hole
10	10	Washer, 2 1/4" Square With 11/16" Hole
2	2	Pin, Crossarm, Steel, Clamp Type
1	1	Crossarm, 3 5/8" x 4 5/8" x 8'-0"
2	2	Washer, Spring, 1/2"
7	7	Washer, Spring, 5/8"
1	1	Bolt, Single Upset, Insulated, 5/8" x Required Length
1	1	Brace, Wood, 60" Span
2	2	Locknut, 1/2"
7	7	Locknut, 5/8"

TENNESSEE VALLEY PUBLIC POWER ASSOCIATION

CROSSARM CONSTRUCTION
THREE-PHASE, LARGE CONDUCTOR
TANGENT STRUCTURE, SINGLE LINE ARM

RUS EQUIVALENT:
15kV: C1-2
25kV: VC1.11L

DWG. No.
15kV: C1-2CL
25kV: VC1-2CL

DATE	REVISION	DATE	REVISION

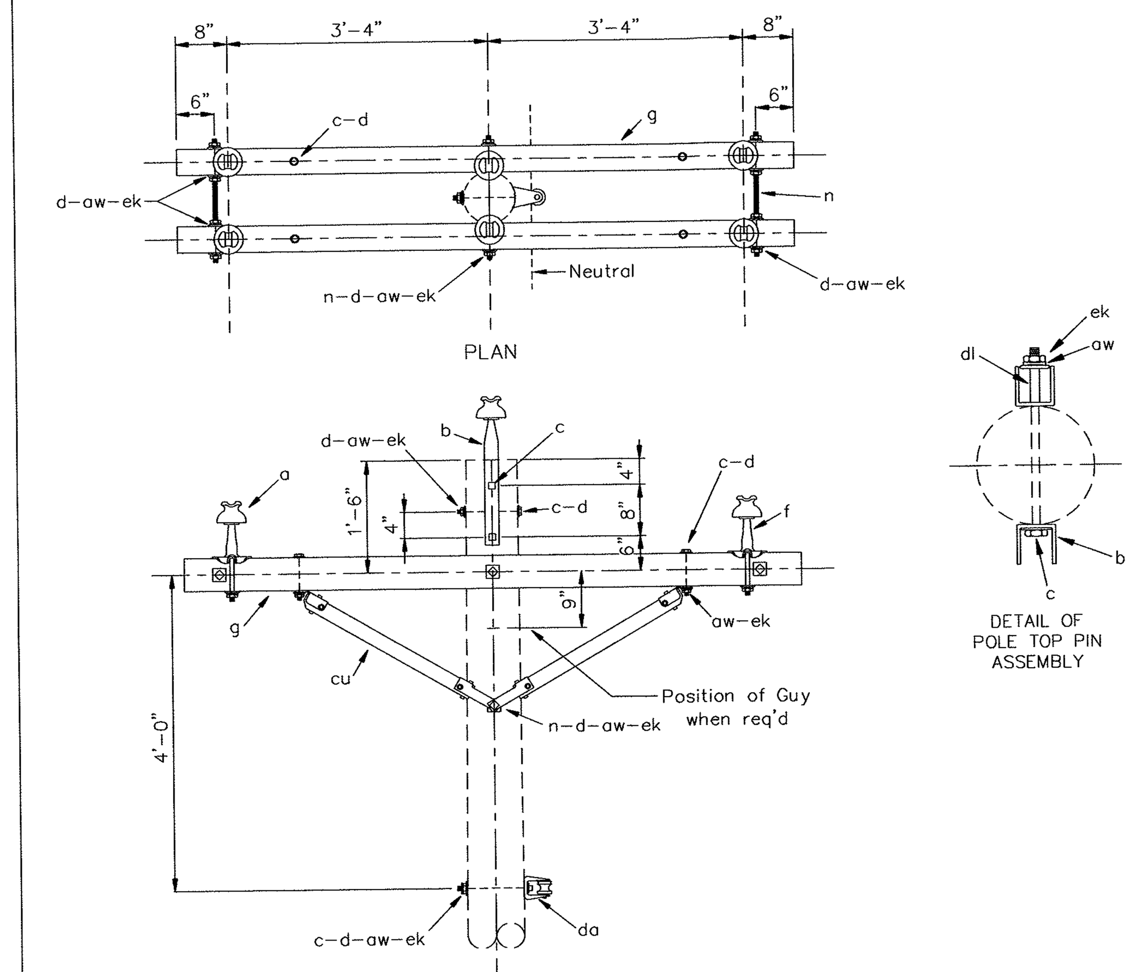

NOTES:

1- This construction required for all conductors having a breaking strength of more than 4500 pounds.

2- Maximum transverse load is 1000 lbs. per conductor

3- If pole top brackets are used with 25kV construction, gain both sides of pole top and maintain 2 inches minimum clearance between pole top insulators.

4- 25kV offset pole top pins may be used in lieu of two standard 25kV pole top pins, two pole top brackets, and two pipe spacers.

ITEM	QUANTITY 15kV	QUANTITY 25kV	DESCRIPTION
a	6	6	Insulator, Pin Type
b	2	2	Pin, Pole Top, 20" (See Notes 3 and 4)
c	4	4	Bolt, Machine, 1/2" x Required Length
c	4	4	Bolt, Machine, 5/8" x Required Length
d	4	4	Washer, 1 3/8" Square With 9/16" Hole
d	15	15	Washer, 2 1/4" Square With 11/16" Hole
f	4	4	Pin, Crossarm, Steel, Clamp Type
g	2	2	Crossarm, 3 5/8" x 4 5/8" x 8'-0"
n	4	4	Bolt, Double Arming, 5/8" x Required Length
aw	4	4	Washer, Spring, 1/2"
aw	11	11	Washer, Spring, 5/8"
cs	–	2	Bracket, Pole Top, 1/4" x 3" (See Notes 3 and 4)
cu	2	2	Brace, Wood, 60" Span
da	1	1	Bracket, Rigid Clevis, Insulated
dl	2	2	Pipe Spacer, 3/4" dia. x 1 1/2" (See Notes 3 and 4)
ek	16	16	Locknut, 3/8"
ek	4	4	Locknut, 1/2"

TENNESSEE VALLEY PUBLIC POWER ASSOCIATION

CROSSARM CONSTRUCTION
THREE-PHASE, LARGE CONDUCTOR
SMALL ANGLE STRUCTURE, DOUBLE LINE ARM

RUS EQUIVALENT:
15kV: C1-3
25kV: VC2.21L

DWG. No.
15kV: C1-3CL
25kV: VC1-3CL

DATE	REVISION	DATE	REVISION

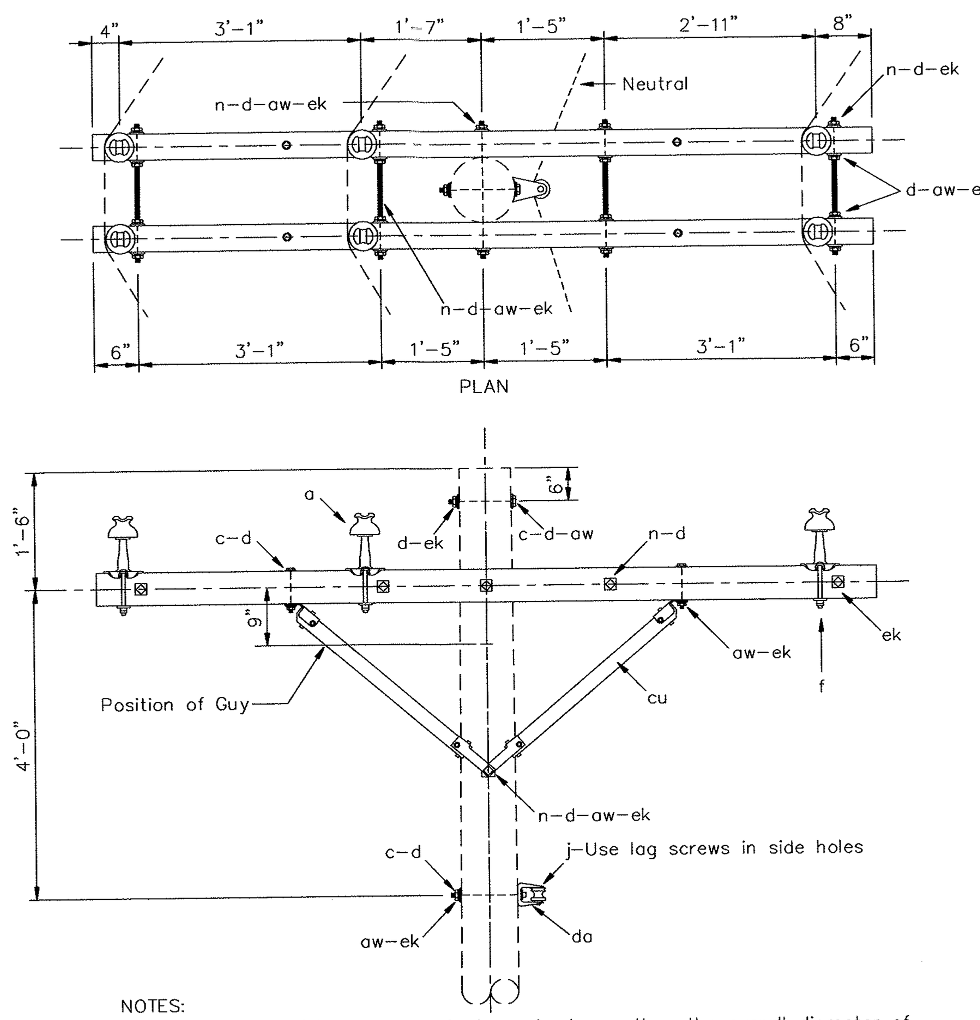

NOTES:

1- Side groove of insulator must always be larger than the overall diameter of conductor including armor rods when required.

2- Center phase wire or neutral wire may be located on the opposite side of the pole where necessary to avoid crossing of wires in midspan.

3- This construction required for all conductors having a breaking strength of more than 4500 pounds.

4- If transverse load exceeds 2000 lbs per conductor, use vertical construction.

ITEM	QUANTITY 15kV	QUANTITY 25kV	DESCRIPTION
a	6	6	Insulator, Pin Type
c	4	4	Bolt, Machine, 1/2" x Required Length
c	2	2	Bolt, Machine, 5/8" x Required Length
d	4	4	Washer, Round, 1 3/8" with 9/16" Hole
d	23	23	Washer, 2 1/4" Square with 11/16" Hole
f	6	6	Pin, Crossarm, Steel Clamp Type
g	2	2	Crossarm, 3 5/8" x 4 5/8" x 10'-0"
j	2	2	Screw, Lag, 1/2" x 4"
n	6	6	Bolt, Double Arming, 5/8" x Required Length
aw	4	4	Washer, Spring, 1/2"
aw	14	14	Washer, Spring, 5/8"
cu	2	2	Brace, Wood, 60"
da	1	1	Bracket, Rigid Clevis, Insulated
ek	4	4	Locknut, 1/2"
ek	22	22	Locknut, 5/8"

TENNESSEE VALLEY PUBLIC POWER ASSOCIATION

CROSSARM CONSTRUCTION
THREE-PHASE, LARGE CONDUCTOR
ANGLE STRUCTURE, DOUBLE LINE ARM

RUS EQUIVALENT:
15kV: C2-2
25kV: VC2.52L

DWG. No.
15kV: C2-2CL
25kV: VC2-2CL

DATE	REVISION	DATE	REVISION

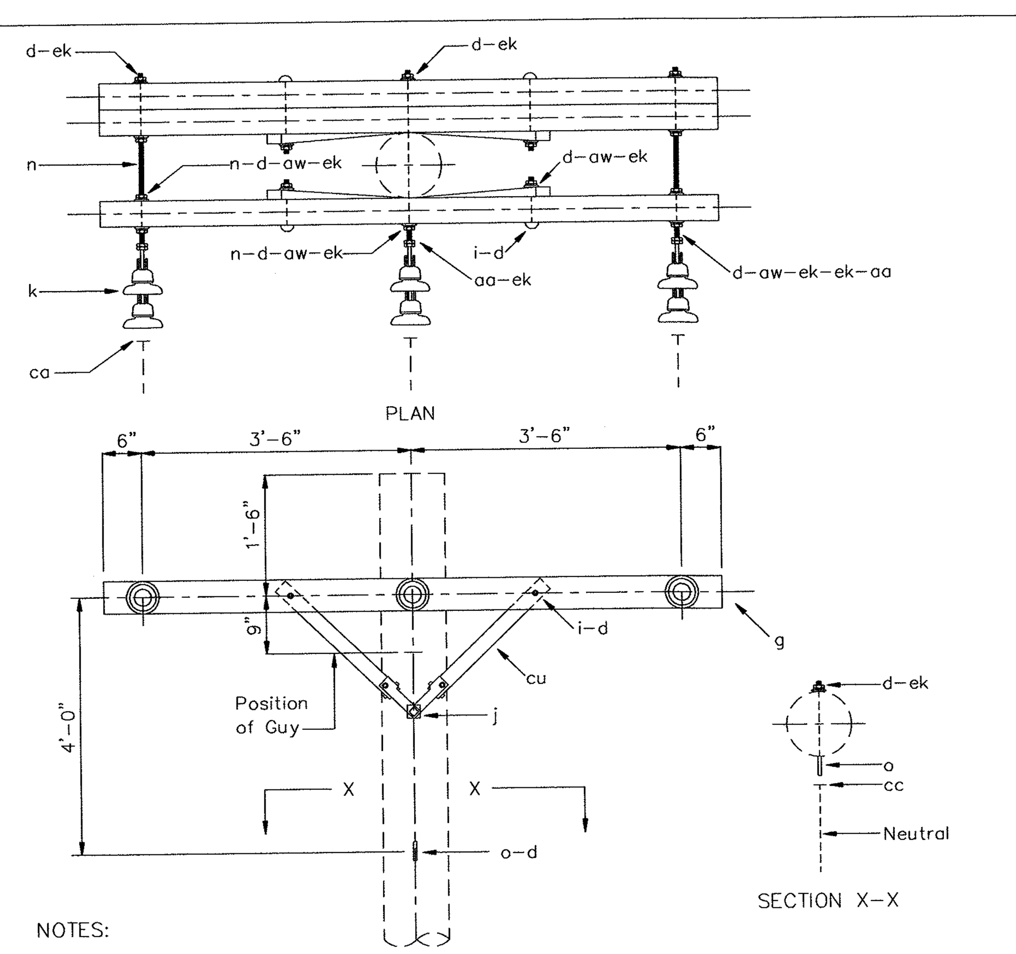

NOTES:

1- Specify items "ca" and "cc" from standard drawings CU-5, CU-6, AC-10 and AC-11.

2- Maximum unbalanced conductor tension not to exceed 2300 lbs. per conductor.

3- Not recommended for conductors with breaking strength greater than 5000 lbs. Limits may be exceeded with proper guying.

4- For 25kV add extension link to middle phase.

5- Specify use of polymer suspension insulator in lieu of porcelain suspension by adding the subscript "P" to the standard number.

ITEM	QUANTITY 15kV	QUANTITY 25kV	DESCRIPTION
d	4	4	Washer, Round, Galvanized, 3/8"
d	10	10	Washer, 2 1/4" Square with 11/16" Hole
d	1	1	Washer, Square, Curved, 3" x 3", with 11/16" Hole
g	3	3	Crossarm, 3 5/8" x 4 5/8" x 8'-0"
i	4	4	Bolt, Carriage, 3/8" x 10"
j	2	2	Screw, Lag, 1/2" x 4"
k	6	9	Insulator, Suspension, 6" (6- 5 3/4" x 10" may be substituted for 25kV)
n	3	3	Bolt, Double Arming, 5/8" x Required Length
o	1	1	Bolt, Oval Eye, 5/8" x Required Length
aa	3	3	Nut, Oval Eye, 5/8"
aw	4	4	Washer, Spring, 3/8"
aw	6	6	Washer, Spring, 5/8"
ca	–	–	Deadend Assembly, Primary (See Note 1)
cc	–	–	Deadend Assembly, Neutral (See Note 1)
cu	4	4	Brace, Wood, 28"
ek	4	4	Locknut, 3/8"
ek	14	14	Locknut, 5/8"
eu	–	1	Link, Extension, Insulated (25kV Only)

TENNESSEE VALLEY PUBLIC POWER ASSOCIATION

CROSSARM CONSTRUCTION
PRIMARY, THREE-PHASE, SINGLE DEADEND STRUCTURE
TRIPLE LINE ARM

RUS EQUIVALENT:
15kV: C7-1
25kV: VC5.31

DWG. No.
15kV: C7-1C
25kV: VC7-1C

DATE	REVISION	DATE	REVISION

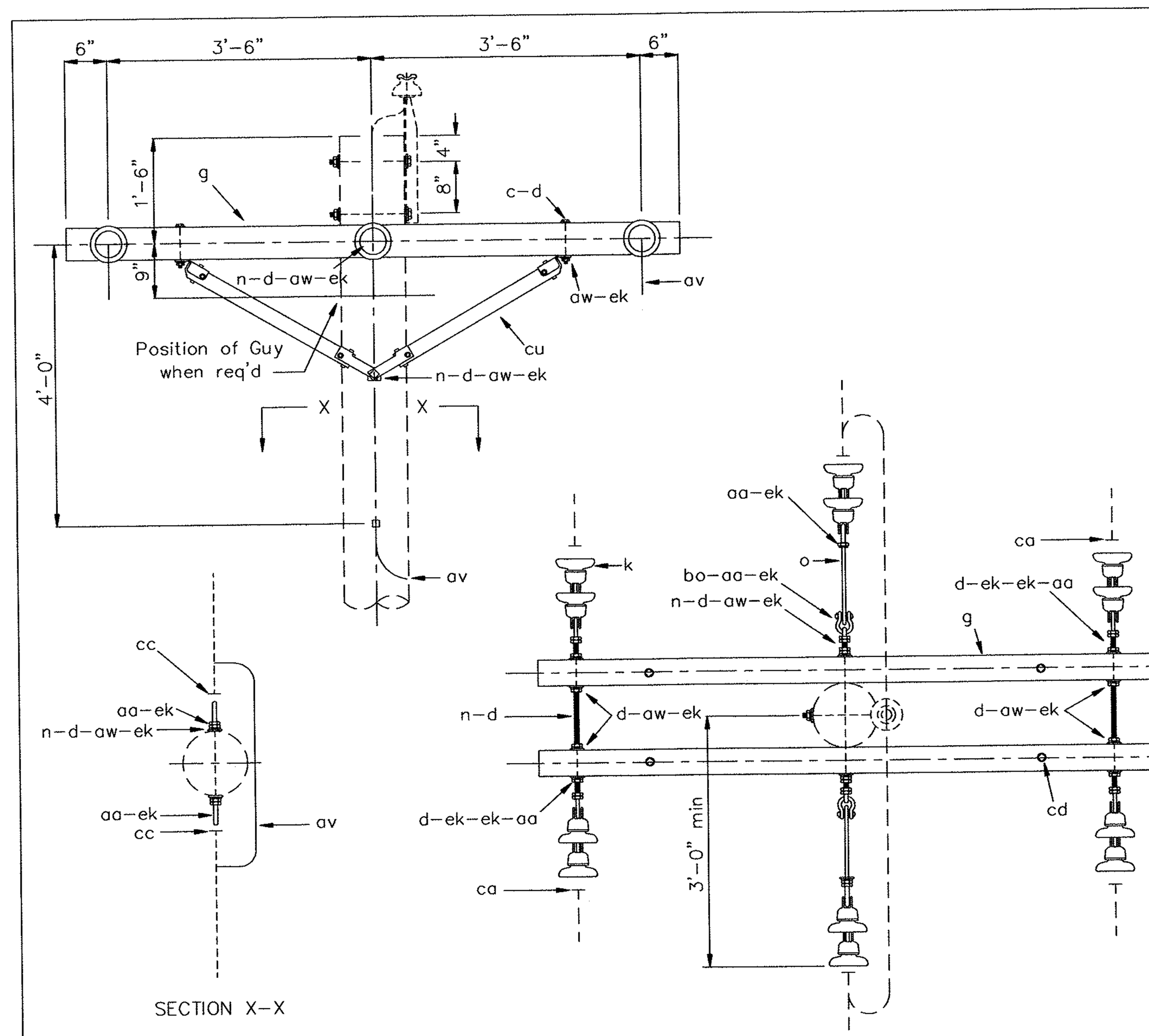

NOTES:

1- Specify items "ca" and "cc" from standard drawings CU-5, CU-6, AC-10 and AC-11.

2- Maximum unbalanced conductor tension not to exceed 1425 lbs. per conductor.

3- Specify use of polymer suspension insulator in lieu of porcelain suspension by adding the subscript "P" to the standard number.

ITEM	QUANTITY 15kV	QUANTITY 25kV	DESCRIPTION
c	4	4	Bolt, Machine, 1/2" x Required Length
d	4	4	Washer, 1 3/8" Square with 9/16" Hole
d	12	12	Washer, 2 1/4" Square with 11/16" Hole
d	2	2	Washer, Square, Curved, 3" x 3", with 11/16" Hole
g	2	2	Crossarm, 3 5/8" x 4 5/8" x 8'-0"
k	12	18	Insulator, Suspension, 6" (12- 5 3/4" x 10" may be substituted for 25kV)
n	5	5	Bolt, Double Arming, 5/8" x Required Length
o	2	2	Bolt, Oval Eye, 5/8" x Required Length
p	–	–	Connectors, As Required
aa	10	10	Nut, Oval Eye, 5/8"
av	–	–	Jumpers and Leads, As Required
aw	4	4	Washer, Spring, 1/2"
aw	8	8	Washer, Spring, 5/8"
bo	2	2	Shackle, Anchor
ca	–	–	Deadend Assembly, Primary (See Note 1)
cc	–	–	Deadend Assembly, Neutral (See Note 1)
cu	2	2	Brace, Wood, 60"
ek	4	4	Locknut, 1/2"
ek	24	24	Locknut, 5/8"

TENNESSEE VALLEY PUBLIC POWER ASSOCIATION

CROSSARM CONSTRUCTION
PRIMARY, THREE-PHASE, DOUBLE DEADEND STRUCTURE
DOUBLE LINE ARM

RUS EQUIVALENT:
15kV: C8
25kV: VC6.21

DWG. No.
15kV: C8C
25kV: VC8C

DATE	REVISION	DATE	REVISION

C2C.dwg

C2-2CL.dwg

9/5/2014 12:29:59 PM
Z:\00923-0005\UTILITIES\B Date\DGN FILES\ROSR29U2-13.sht

Survey & Design Division

Cannon&Cannon,Inc.
Consulting Engineers • Field Surveyors
8550 Kingston Pike
Knoxville, Tennessee 37919
Telephone: (865) 670-8555 • Fax: (865) 670-8866
www.cannon-cannon.com

HARRIMAN UTILITY BOARD
300 North Roane Street
Harriman, TN 37748
Phone (865) 882-3242

ELECTRIC RELOCATION
ELECTRIC DETAILS

JEFF L. MEADOW REGISTERED ENGINEER AGRICULTURE COMMERCE No. 23035 STATE OF TENNESSEE

CCI NO.	923-0005
P.I.C.	JEFF MEADOW
DRAWN	JNR
Q.C.	DM
SCALE: 1" = 50'	DATE: 8-29-2014