TENNESSEE D.O.T.
DESIGN DIVISION
FILE NO.

| TYPE | YEAR | PROJECT NO. | SHEET NO. |
|---|---|---|---|
| CONST. | 2015 | NH-29(86) | U2-15 |

MORGAN COUNTY 65001-3268-14

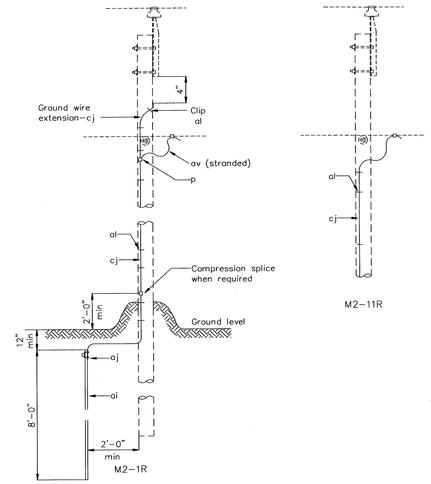


NOTES:

1– Ground wire to be located on same side as neutral conductor and in quadrant opposite climbing space or pole top pin.

2– Staples on ground wire shall be 2'–0" apart, except for a distance of 8'–0" above ground and 8'–0" from top of pole, where they shall be 6" apart.

3– Ground wire to clear all hardware by 2" minimum, and shall be stapled to maintain this position.

4– Ground wire moulding may be installed at discretion of owner.

| ITEM | QUANTITY M2–1 | QUANTITY M2–11 | DESCRIPTION |
|---|---|---|---|
| p | 2 | 1 | Connectors, Compression |
| al | 1 | 1 | Rod, Ground 5/8" diameter 8'–0" |
| aj | 1 | 1 | Clamp, Ground Rod |
| al | * | * | Staples, Ground Wire, as req'd |
| al | 1 | – | Ground Wire Clip |
| cj | * | * | Ground wire, #6 S.D. Copper or Equiv., Length As Req'd |
| cj | 1 | 1 | Ground Wire Extension |
| av | 1 | – | Jumper, #6 S.D. Copper or Equiv., Length As Req'd |

TENNESSEE VALLEY PUBLIC POWER ASSOCIATION

GROUNDING ASSEMBLY
GROUND ROD TYPE

RUS EQUIVALENT:
15kV – M2–1, M2–11
25kV – H1.1

DWG. No.
M2–1R
M2–11R

| DATE | REVISION | DATE | REVISION |
|---|---|---|---|
| | | | |

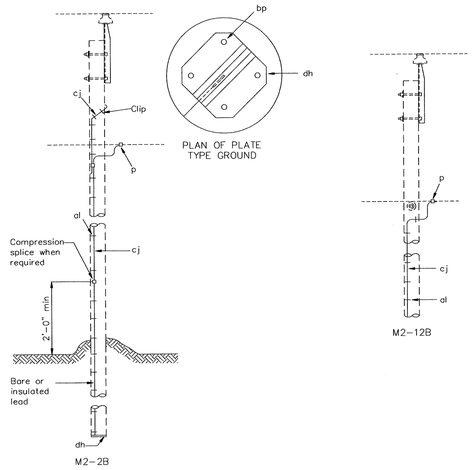


NOTES:

1– Ground wire to be located on same side as neutral conductor and in quadrant opposite climbing space or pole top pin.

2– Staples on ground wire shall be 2'–0" apart, except for a distance of 8'–0" above ground and 8'–0" from top of pole where they shall be 6" apart.

3– Ground wire to clear all hardware by 2" minimum and shall be stapled to maintain this position.

4– Ground wire moulding may be installed at the discretion of the owner.

| ITEM | QUANTITY 15kV | QUANTITY 25kV | DESCRIPTION |
|---|---|---|---|
| p | * | * | Connectors As Req'd |
| al | * | * | Staples, Ground Wire, As Req'd |
| al | * | * | Ground Wire Clip |
| bp | 4 | 4 | Nails, Galvanized, 1" Roofing |
| cj | * | * | Jumper, #6 S.D. Copper or Equiv., Length As Req'd |
| cj | 1 | – | Ground Wire Extension, #6 S.D. Copper or Equiv. |
| dh | 1 | – | Butt Type Grounding Plate |
| dh | – | 1 | Grounding Plate, Galvanized Steel, With Insulated Copper Lead |

TENNESSEE VALLEY PUBLIC POWER ASSOCIATION

GROUNDING ASSEMBLY
BUTT AND PLATE TYPE

RUS EQUIVALENT:
15kV – M2–2, M2–12
25kV – P2.1

DWG. No.
M2–2B
M2–12B

| DATE | REVISION | DATE | REVISION |
|---|---|---|---|
| | | | |

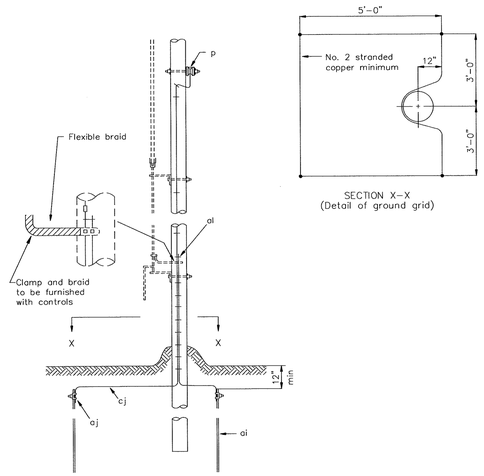


NOTES:

1– Use on 15 kV only.

| ITEM | QUANTITY 15kV | DESCRIPTION |
|---|---|---|
| p | 1 | Connectors |
| ai | 4 | Rod, Ground, 5/8" Dia. x 8'–0" |
| aj | 4 | Clamp, Grounding Rod |
| al | * | Staple Ground Wire, As Req'd |
| cj | * | Ground Wire, #2 Stranded Bare Copper Minimum (Length As Req'd) |

TENNESSEE VALLEY PUBLIC POWER ASSOCIATION

GROUNDING ASSEMBLY ROD TYPE
FOR SECTIONALIZING AIR BREAK SWITCH

RUS EQUIVALENT:
15kV – M2–15

DWG. No.
M2–15R

| DATE | REVISION | DATE | REVISION |
|---|---|---|---|
| | | | |

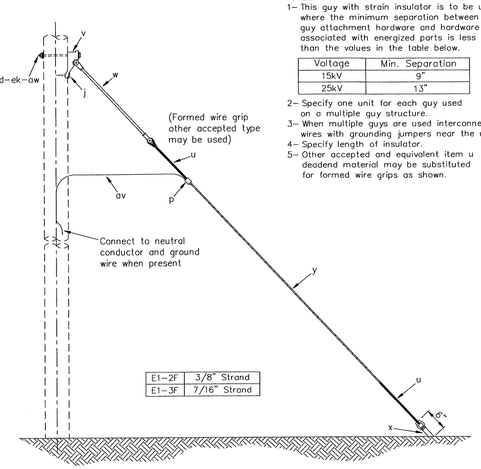


NOTES:

1– This guy with strain insulator is to be used where the minimum separation between guy attachment hardware and hardware associated with energized parts is less than the values in the table below.

| Voltage | Min. Separation |
|---|---|
| 15kV | 9" |
| 25kV | 13" |

2– Specify one unit for each guy used on a multiple guy structure.

3– When multiple guys are used interconnect guy wires with grounding jumpers near the upper ends.

4– Specify length of insulator.

5– Other accepted and equivalent item u deadend material may be substituted for formed wire grips as shown.

NOTES:

1–Maximum unbalanced tension not to exceed 2000 lbs. per conductor.
2–Use fiberglass strain insulators at pole for guying.
3–This configuration may be used with other material assemblies.
4–Use guying assemblies to balance tensions.
5–Not recommended for turning angles on this type of structure.

| ITEM | QUANTITY 15kV | QUANTITY 25kV | DESCRIPTION |
|---|---|---|---|
| c | 1 | 1 | Bolt, Machine, 5/8" x Required Length |
| d | 1 | 1 | Washer, Curved, Square, 3" |
| j | 1 | 1 | Screw, Log, 1/2" x 4" |
| p | – | – | Connectors, As Required |
| u | 2 | 2 | Formed Wire Grip, Size As Required |
| v | 1 | 1 | Guy Attachment, Pole Eye, Plate Type |
| w | 1 | 1 | Insulator, Fiberglass, Strain |
| x | 1 | 1 | Rod Anchor, Thimble Eye |
| y | – | – | Guy Wire, As Required |
| av | 1 | 1 | Jumper, #6 S.D. Copper or Equivalent |
| aw | 1 | 1 | Washer, Spring, 5/8" |
| ek | 1 | 1 | Locknut, 5/8" |

TENNESSEE VALLEY PUBLIC POWER ASSOCIATION

NARROW PROFILE CONSTRUCTION,
INSULATED SINGLE DOWN GUY ASSEMBLY

RUS EQUIVALENT:
E1–2F
E1–3F

DWG. No.
E1–2F
E1–3F

| DATE | REVISION | DATE | REVISION |
|---|---|---|---|
| | | | |

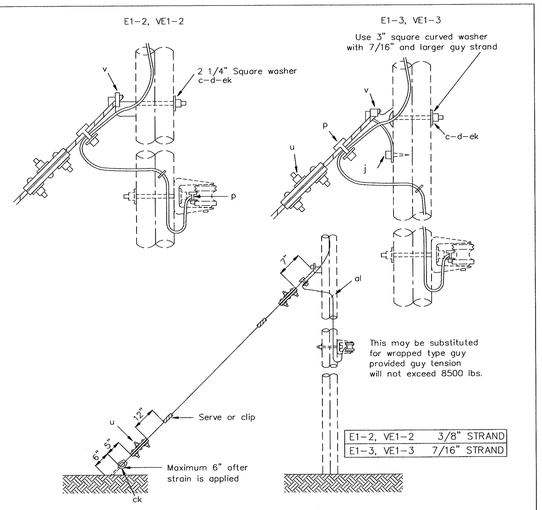


NOTES:

1– Other accepted and equivalent dead–end material may be substituted for 3–bolt clamps.

| ITEM | QUANTITY E1–2 | QUANTITY E1–3 | DESCRIPTION |
|---|---|---|---|
| c | 1 | 1 | Bolt, machine, 5/8" x Req'd Length |
| d | 1 | – | Washer, 2 1/4" Square With 11/16" Hole |
| d | – | 1 | Washer, Curved, 3" Sq. x 1/4" With 11/16" Hole, As Req'd |
| j | – | – | Screw, Log, 1/2" x 4", As Required |
| p | – | – | Connectors, As Req'd |
| u | 2 | 2 | Clamp, Guy, 3–Bolt |
| v | 1 | – | Guy Attachment (5200 lbs.) |
| v | – | 1 | Guy Attachment, Heavy Duty (8500 lbs.) |
| y | 1 | – | 3/8" Guy Strand, Length As Req'd |
| y | – | 1 | 7/16" Guy Strand, Length As Req'd |
| ck | 1 | 1 | Clamp, Bonding, Guy |
| ek | 2 | 2 | Locknut, 5/8" |

TENNESSEE VALLEY PUBLIC POWER ASSOCIATION

SINGLE DOWN GUY
THROUGH BOLT TYPE

RUS EQUIVALENT:
15kV: E1–2, E1–3
25kV: VE1–2, VE1–3

DWG. No.
E1–2T
E1–3T

| DATE | REVISION | DATE | REVISION |
|---|---|---|---|
| | | | |

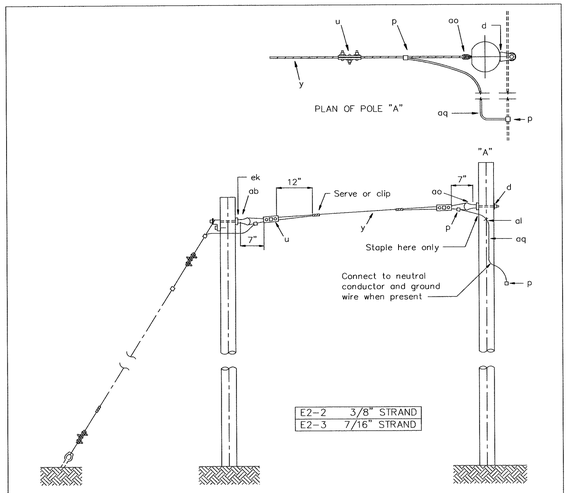


NOTES:

1– Other accepted and equivalent items of deadend material may be substituted for the 3–bolt clamp shown.

| ITEM | QUANTITY E2–2 | QUANTITY E2–3 | DESCRIPTION |
|---|---|---|---|
| d | 1 | 1 | Washer, Curved, 3" Sq. x 5/16" With 11/16" Hole |
| p | * | * | Connectors As Req'd |
| u | 2 | 2 | Clamp, Guy, 3–Bolt, 6" Heavy Duty |
| y | 1 | – | 3/8" Guy Strand, Length As Req'd |
| y | – | 1 | 7/16" Guy Strand, Length As Req'd |
| ab | 1 | 1 | Nut, Thimble Eye, 5/8" |
| aa | 1 | 1 | Bolt, Thimble Eye, 5/8" x Req'd Length |
| aq | 1 | 1 | Jumpers, #6 S.D. or Equiv. |
| ek | * | * | Locknut, 5/8", As Req'd |

TENNESSEE VALLEY PUBLIC POWER ASSOCIATION

SINGLE OVERHEAD GUY
THROUGH BOLT TYPE

RUS EQUIVALENT:
15kV: E2–2, E2–3

DWG. No.
E2–2T
E2–3T

| DATE | REVISION | DATE | REVISION |
|---|---|---|---|
| | | | |


Cannon&Cannon, Inc.
Consulting Engineers • Field Surveyors
8550 Kingston Pike
Knoxville, Tennessee 37919
Telephone: (865) 670-8555 • Fax: (865) 670-8866
www.cannon-cannon.com


HARRIMAN UTILITY BOARD
300 North Roane Street
Harriman, TN 37748
Phone (865) 882-3242

ELECTRIC RELOCATION
ELECTRIC DETAILS

JEFF I. MEADOW
REGISTERED ENGINEER
No. 23025
STATE OF TENNESSEE

| | |
|---|---|
| CCI NO. | 923-0005 |
| P.I.C. | JEFF MEADOW |
| DRAWN | JNR |
| D.C. | DM |
| SCALE: 1" = 50' | DATE: 8-29-2014 |

Survey & Design Division

9/5/2014 12:32:08 PM
Z:\00923-0005\UTILITIES\B Date\DGN FILES\R05R29U2-15.sht