TENNESSEE D.O.T.
DESIGN DIVISION
FILE NO. ---

TYPE	YEAR	PROJECT NO.	SHEET NO.
CONST.	2015	NH-29(86)	U5-23

MORGAN COUNTY 65001-3268-14

THRUST RESTRAINT TABLE

HORIZ. BENDS			VERT. BENDS			TEES				REDUCERS		
SIZE	FITTING	MIN. RESTRAINED LENGTH	SIZE	FITTING	MIN. RESTRAINED LENGTH	SIZE RUN	SIZE BRANCH	TOTAL LENGTH BETWEEN FIRST JOINT ON TEE RUN (L.)	MIN. RESTRAINED LENGTH FOR BRANCH	LARGE END	SMALL END	MIN. RESTRAINED LENGTH FOR LARGE END
12"	11r°	11'	12"	11r° UP	11'	12"	12"	3' (MIN.)	97'	18"	16"	30'
12"	22i°	22'	12"	11r° DOWN	20'	16"	12"	3' (MIN.)	97'	18"	12"	79'
12"	45°	46'	12"	22i° UP	22'	16"	16"	3' (MIN.)	129'	24"	16"	105'
12"	90°	111'	12"	22i° DOWN	39'	24"	24"	3' (MIN.)	192'			
16"	11r°	14'	12"	45° UP	46'							
16"	22i°	29'	12"	45° DOWN	82'							
16"	45°	60'	12"	90° UP	111'							
16"	90°	145'	12"	90° DOWN	198'							
24"	11r°	21'	16"	11r° UP	14'							
24"	22i°	42'	16"	11r° DOWN	26'							
24"	45°	88'	16"	22i° UP	29'							
24"	90°	213'	16"	22i° DOWN	52'							
			16"	45° UP	60'							
			16"	45° DOWN	108'							
			16"	90° UP	145'							
			16"	90° DOWN	261'							
			24"	11r° UP	21'							
			24"	11r° DOWN	38'							
			24"	22i° UP	42'							
			24"	22i° DOWN	77'							
			24"	45° UP	88'							
			24"	45° DOWN	160'							
			24"	90° UP	213'							
			24"	90° DOWN	387'							

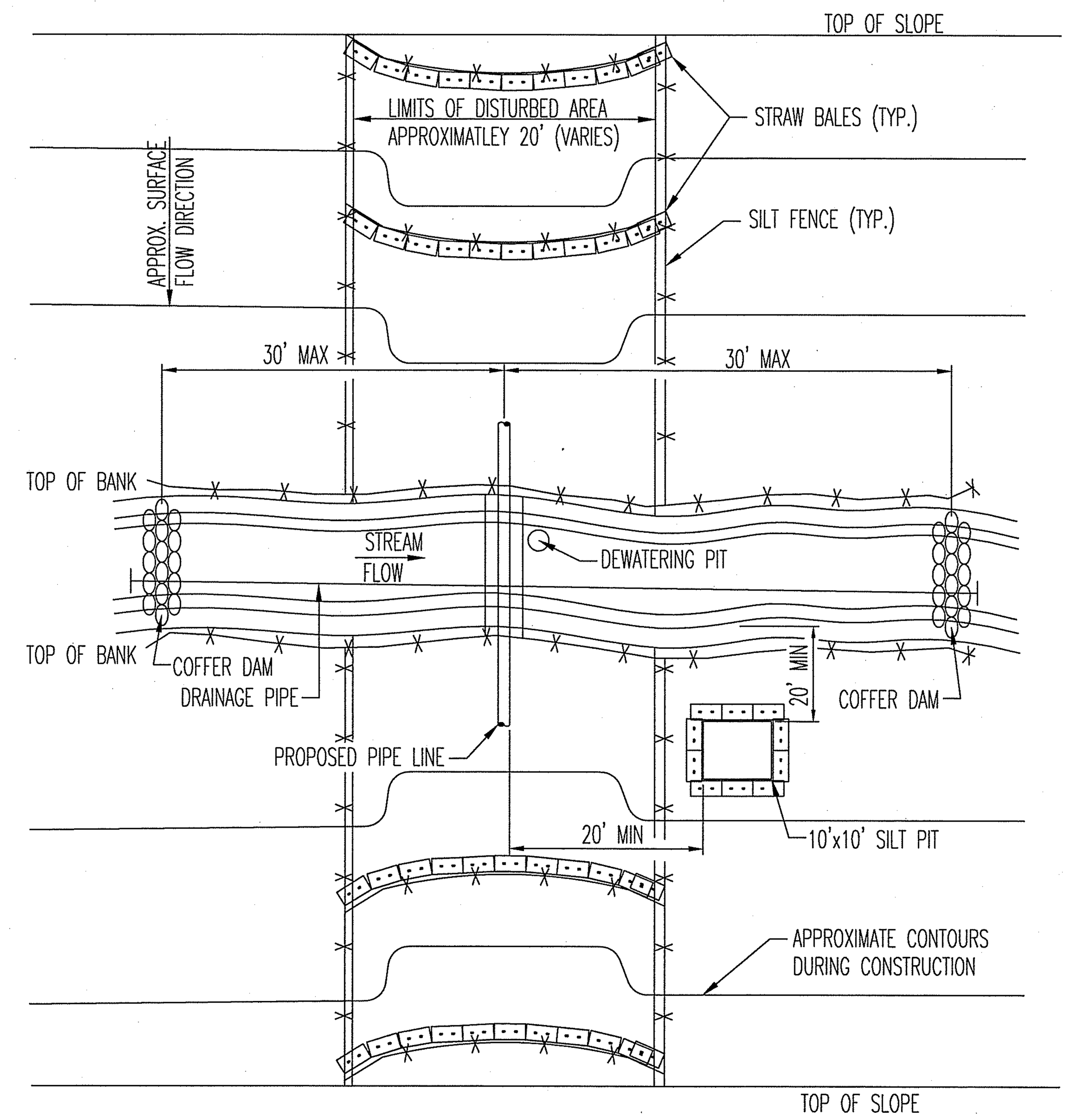

NOTES:
1. FOR AREAS BEHIND STRAW BALES AND SILT FENCE BARRIERS,
   MAX SLOPE LENGTH = 100'
   MAX. SLOPE = 50% (2:1)
2. ALL SURFACES SHALL BE RETURNED TO THERE PREVIOUS ELEVATIONS UPON COMPLETION OF CONSTRUCTION ACTIVITIES.
3. ALL AREAS SHALL BE STABILIZED AS REQUIRED.
4. CROSSING SHALL BE PERFORMED IN DRY PERIODS WHEN POSSIBLE.
5. EROSION AND SEDIMENT CONTROL STRUCTURES SHALL BE INSTALLED IN PHASES AS CONSTRUCTION PROCEEDS AND REMAIN IN PLACE UNTIL AREAS ARE PERMANENTLY STABILIZED.
6. INSTALLATION OF EROSION AND SEDIMENT CONTROLS SHALL BE PERFORMED AS DEMONSTRATED IN THE TENNESSEE EROSION AND SEDIMENT CONTROL HANDBOOK (LATEST REVISION).

TYPICAL MAJOR CREEK CROSSING DETAIL

NO SCALE

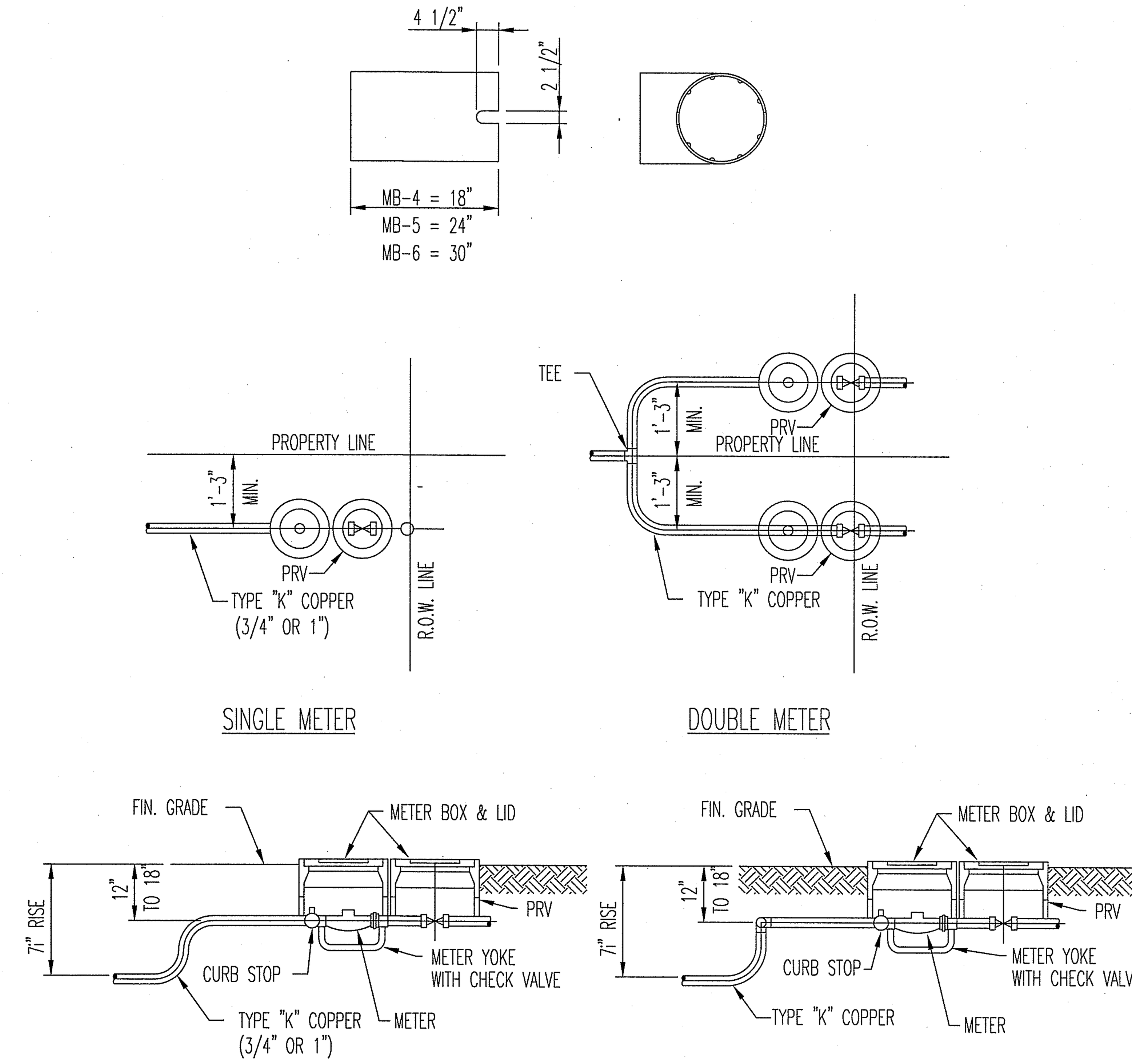

TYPICAL METER SETTING DETAILS

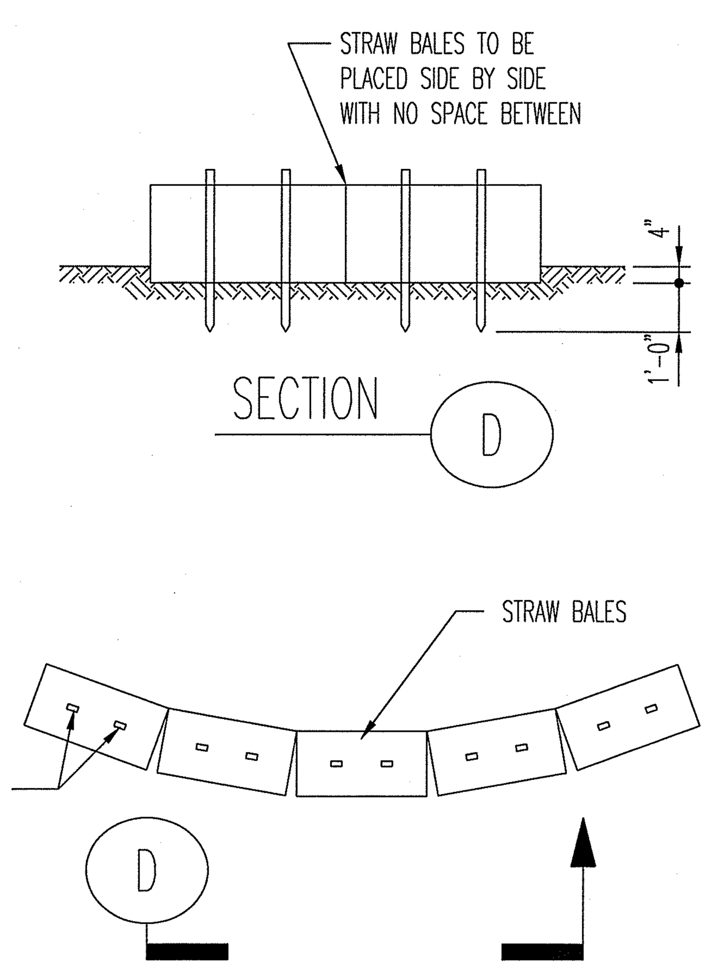

STRAW BALE EROSION CONTROL DETAIL

NO SCALE
(TYPICAL FOR ALL STRAW BALE USAGE)

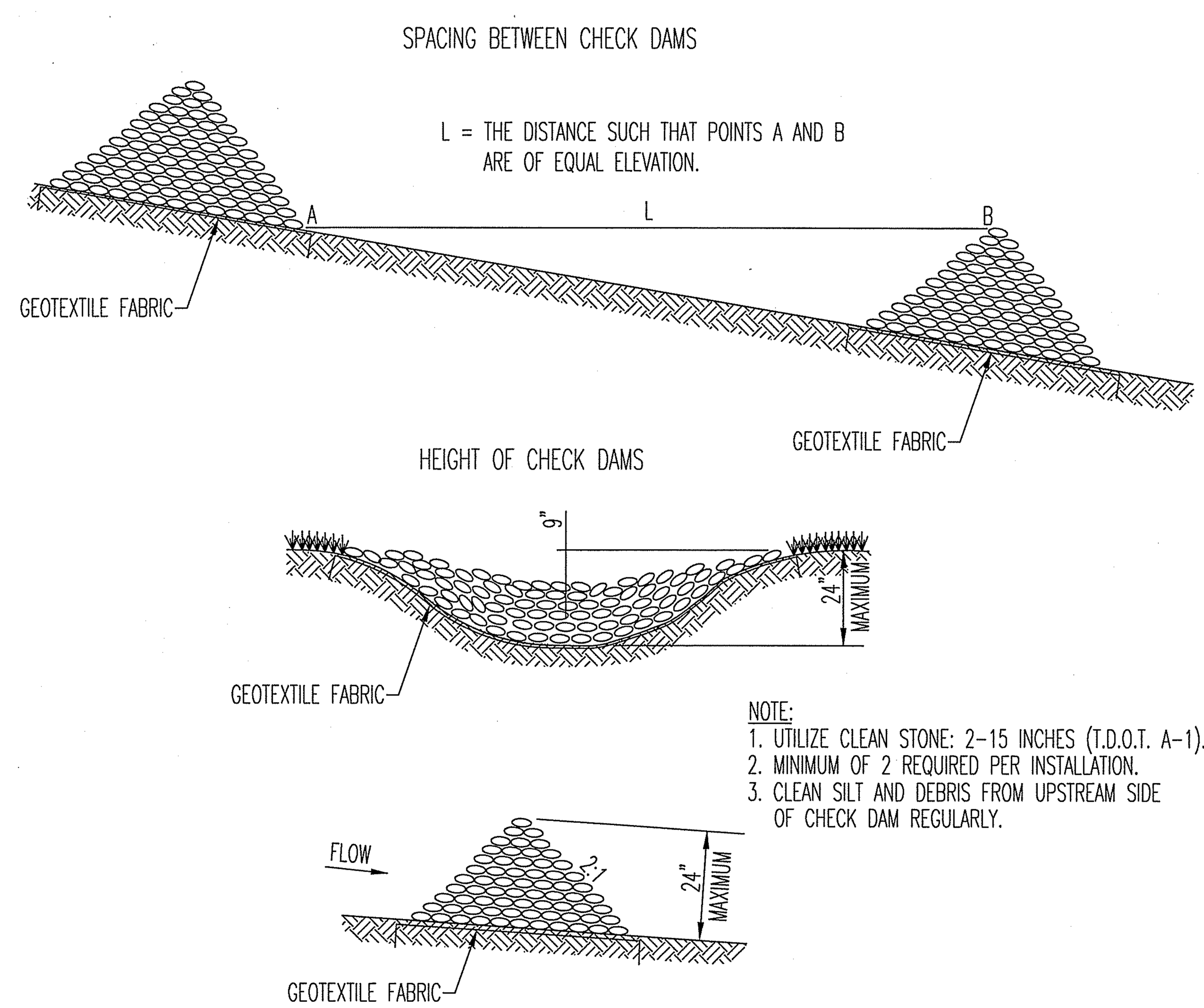

NOTE:
1. UTILIZE CLEAN STONE: 2-15 INCHES (T.D.O.T. A-1).
2. MINIMUM OF 2 REQUIRED PER INSTALLATION.
3. CLEAN SILT AND DEBRIS FROM UPSTREAM SIDE OF CHECK DAM REGULARLY.

ROCK CHECK DAM

(UTILIZE FOR DRAINAGE AREAS LESS THAN 5 ACRES)
SCALE: NONE

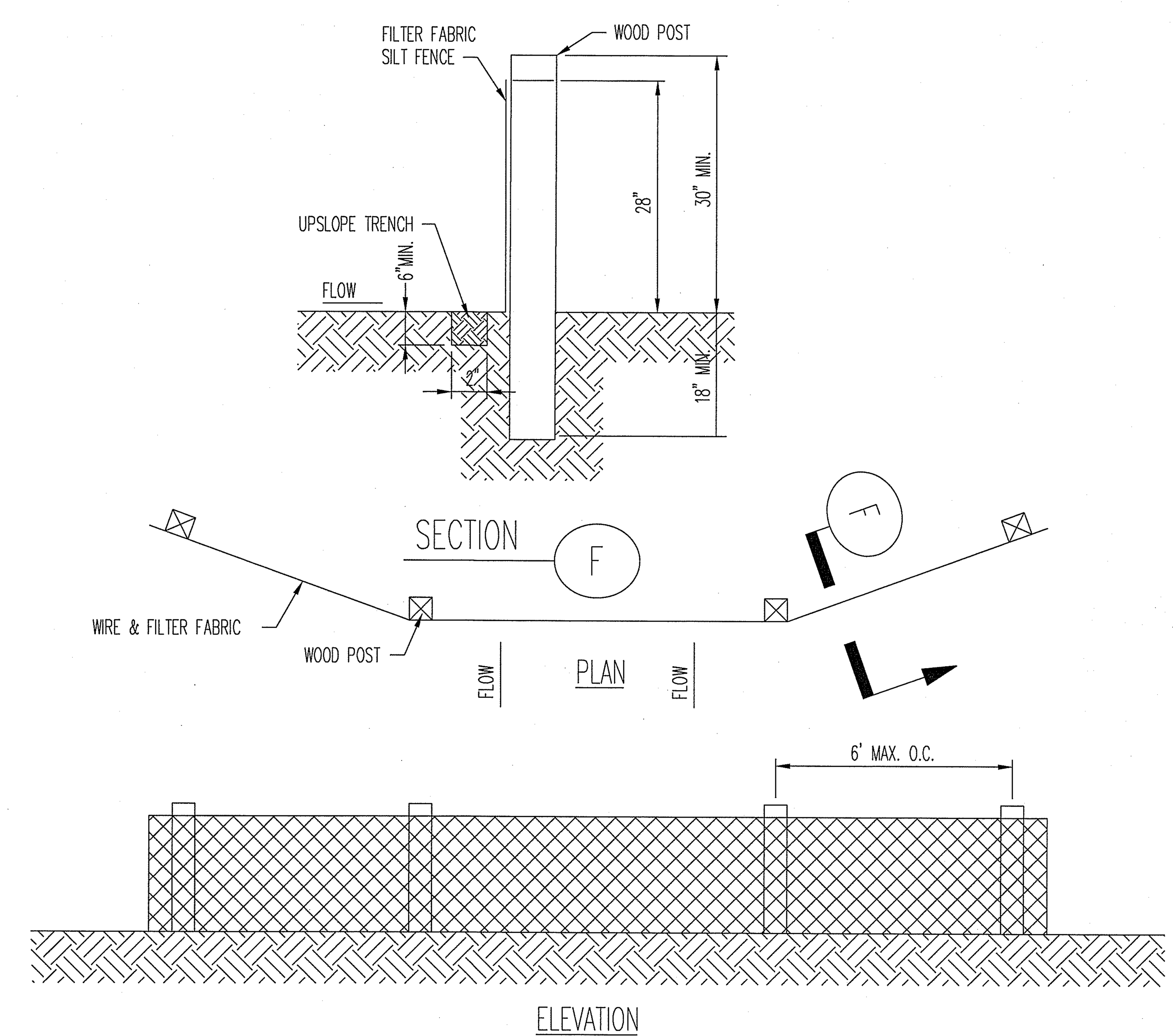

TYPE - A - SILT FENCE DETAIL

NO SCALE

STATE OF TENNESSEE
DEPARTMENT OF TRANSPORTATION
BUREAU OF PLANNING & DEVELOPMENT

TYPICAL DETAILS

N.T.S.

GARY STEVEN BOS
REGISTERED ENGINEER
AGRICULTURE COMMERCE
No. 019129
STATE OF TENNESSEE
$$$$SYTIME$$$$$$
$$$$DGNSPEC$$
Survey & Design Division