TENNESSEE D.O.T.
DESIGN DIVISION
FILE NO.

| TYPE | YEAR | PROJECT NO. | SHEET NO. |
|---|---|---|---|
| CONST. | 2015 | NH-29(86) | U2-17 |

MORGAN COUNTY 65001-3268-14

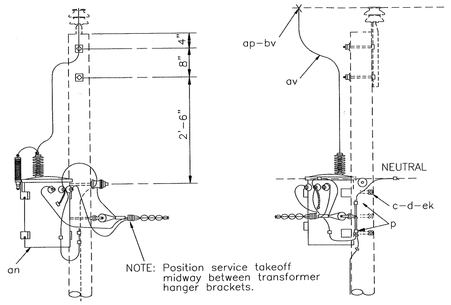


NOTES:

1- Bond transformer neutral to system ground.

2- Refer to connection details for transformer wiring schematics.

3- CSP transformers may be mounted at 45° to the line.

| ITEM | QUANTITY | DESCRIPTION |
|---|---|---|
| c | 2 | Bolt, Machine, 5/8" x Req'd Length |
| d | 2 | Washer, Square, 2 1/4", With 11/16" Hole |
| p | * | Connectors, Compression Type, As Req'd |
| an | 1 | Transformer, CSP, Voltage and kVA as Req'd |
| ap | 1 | Clamp, Hot Line |
| av | * | Jumpers, Stranded, As Req'd |
| bv | 1 | Rod, Armor |
| ek | 2 | Locknuts, 5/8" |

TENNESSEE VALLEY PUBLIC POWER ASSOCIATION

SINGLE PHASE TRANSFORMER INSTALLATION ON SINGLE PHASE PRIMARY LINE 15kV AND 25kV

RUS EQUIVALENT:
15kV: NONE
25kV: VG1.7

DWG. No. G11-KVA

| DATE | REVISION | DATE | REVISION |
|---|---|---|---|
| | | | |

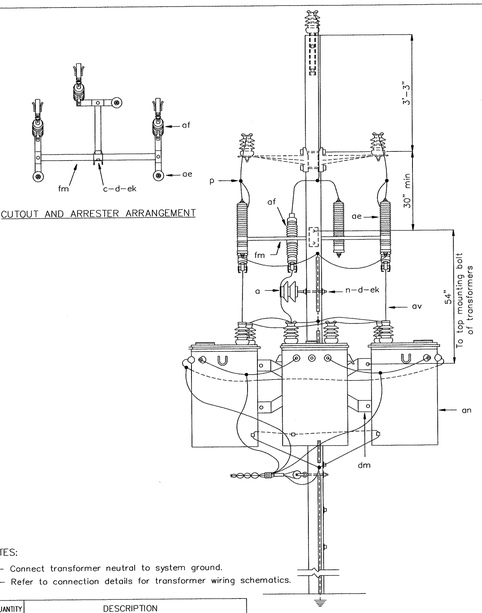


NOTES:

1- Connect transformer neutral to system ground.

2- Refer to connection details for transformer wiring schematics.

| ITEM | QUANTITY | DESCRIPTION |
|---|---|---|
| a | 1 | Insulator, Pin Type |
| c | 2 | Bolt, Machine, 5/8" x Req'd Length |
| d | 4 | Washer, 2 1/4" Square With 11/16" Hole |
| j | 4 | Screw, Lag, 1/2" x 4" |
| n | 1 | Bolt, Double Arming, 5/8" x Req'd Length |
| p | * | Connectors As Req'd |
| ae | 3 | Surge Arrester |
| af | 3 | Fused Cutout |
| an | 3 | Transformer, Conventional, Voltage and kVA as Req'd |
| av | * | Jumpers, #6 S.D. Copper or Equiv., Length As Req'd |
| aw | * | Washer, Spring, 5/8", As Req'd |
| dm | 1 | Bracket, Transformer, Cluster Mount |
| ek | 4 | Locknut, 5/8" |
| fm | 1 | Bracket, Combination Cutout and Arrester |

TENNESSEE VALLEY PUBLIC POWER ASSOCIATION

THREE PHASE POLE MOUNTED TRANSFORMER INSTALLATION NARROW PROFILE CONSTRUCTION

RUS EQUIVALENT:
NONE

DWG. No. G33-KVA

| DATE | REVISION | DATE | REVISION |
|---|---|---|---|
| | | | |

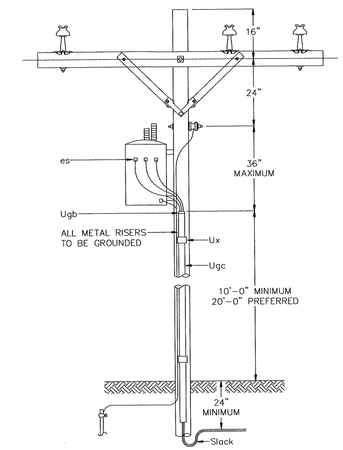


NOTES:

1- Seal secondary cables to prevent entrance of moisture at transformer.

2- Allow mimimum cable slack of 24" at bottom of riser.

3- All live parts must have an 18 foot clearance above ground and must be installed a mimimum of 6 inches above the neutral conductor.

| ITEM | QUANTITY 15kV | QUANTITY 25kV | DESCRIPTION |
|---|---|---|---|
| es | * | * | Moisture Seal, As Req'd |
| Ugb | 1 | 1 | Bushing, Grounding Tgee, Size To Fit Riser Conduit |
| Ugc | 1 | 1 | Cable Riser Conduit, Galvanized Rigid Steel, Length As Req'd |
| Ux | * | * | Strap, Conduit, 2 Hole, Size And Number As Req'd |

TENNESSEE VALLEY PUBLIC POWER ASSOCIATION

SINGLE-PHASE SECONDARY RISER POLE

RUS EQUIVALENT:
NONE

DWG. No. UM-5-2

| DATE | REVISION | DATE | REVISION |
|---|---|---|---|
| | | | |

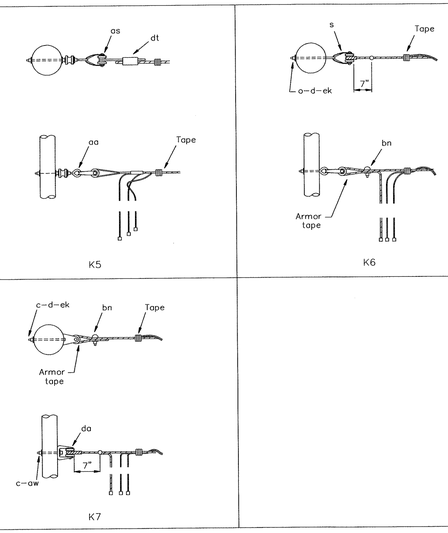


NOTES:

1- This type construction should be used for 3 or 4 conductor service cables with bare A.C.S.R. neutral.

2- Wedge and preformed service deadends may be substituted for deadends shown.

3- Groove diameter of insulators- 1 3/4" minimum for loop deadends.

| ITEM | DESCRIPTION |
|---|---|
| c | Bolt, Machine, 5/8" x req'd length |
| d | Washer, Square, 2 1/4" x 2 1/4", With 11/16" Hole |
| o | Bolt, Eye, 5/8" x req'd length |
| s | Clevis, Secondary, Swinging, Insulated |
| aa | Nut, Oval Eye, 5/8" |
| as | Clevis, Service, Swinging Insulated |
| bn | Clamp, Loop Deadend |
| da | Clevis, Square, Insulated |
| dt | Service Deadend, Wedge Clamp Type |
| ek | Locknut, 5/8" |

TENNESSEE VALLEY PUBLIC POWER ASSOCIATION

SERVICE ASSEMBLIES ALUMINUM WEATHER PROOF POLE ATTACHMENTS

RUS EQUIVALENT:
15kV: K11C, K14C, K15C
25kV: K1.2, K1.4

DWG. No. K5 TO K7

| DATE | REVISION | DATE | REVISION |
|---|---|---|---|
| | | | |

K5.dwg

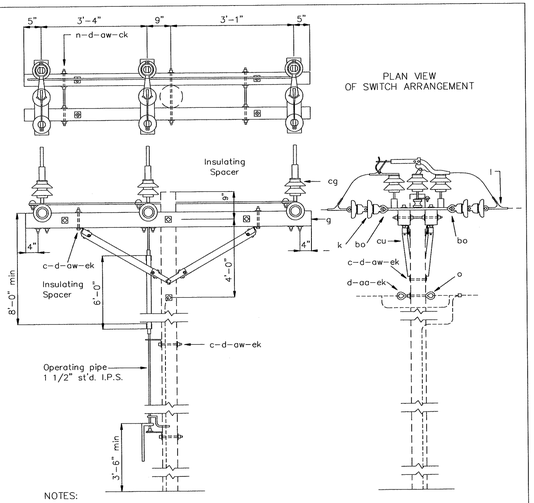


NOTES:

1- Refer to M2-15P (preferred) or M2-15R (15kV only) for grounding assembly.

2- Install lightning arresters on adjacent poles if switch is to be operated normally open.

| ITEM | QUANTITY 15kV | QUANTITY 25kV | DESCRIPTION |
|---|---|---|---|
| c | 14 | 14 | Bolt, Machine, 5/8" x Req'd Length |
| c | 4 | 4 | Bolt, Machine, 1/2" x Req'd Length |
| d | 14 | 14 | Washer, 2 1/4" Square With 11/16" Hole |
| d | 4 | 4 | Washer, 1 3/8" Round With 9/16" Hole |
| g | 2 | 2 | Crossarm, 3 3/4" x 4 3/4"x 8'-0" |
| k | 12 | - | Insulator, Suspension 6" |
| k | - | 12 | Insulator, Suspension 10" |
| l | 6 | 6 | Clamp, Deadend |
| n | 3 | 3 | Bolt, Double Arming, 5/8" x Req'd Length |
| o | 1 | 1 | Bolt, Eye, 5/8", x Req'd Length |
| oo | 1 | 1 | Nut, Eye, 5/8" |
| ow | 4 | 4 | Washer, Spring, 1/2" |
| ow | 8 | 8 | Washer, Spring, 5/8" |
| bo | 6 | 6 | Shackle, Anchor |
| cg | 1 | 1 | Switch, Airbreak, 3 Pole Unit With Operating Mechanism And Insulated Spacers, Voltage As Req'd |
| cu | 4 | 4 | Brace, Wood, 60" Span |
| ek | * | * | Locknut, 1/2" |
| ek | * | * | Locknut, 5/8" |

TENNESSEE VALLEY PUBLIC POWER ASSOCIATION

HORIZONTAL MOUNTED SECTIONALIZING AIR BREAK SWITCH

RUS EQUIVALENT:
15kV - M3-15
25kV - VS2.32

DWG. No. M3-15C

| DATE | REVISION | DATE | REVISION |
|---|---|---|---|
| | | | |

M3-15C.dwg

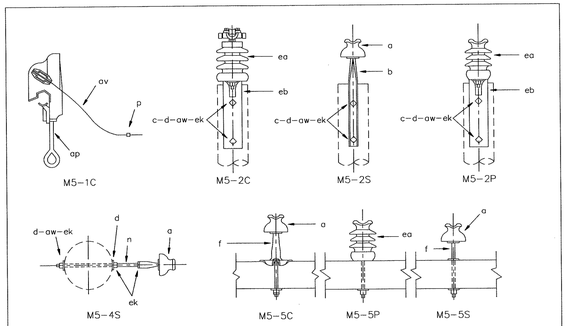


| ITEM | DESCRIPTION | QUANTITY M5-1C | M5-2C | M5-2S | M5-2P | M5-4S | M5-5C | M5-5P | M5-5S |
|---|---|---|---|---|---|---|---|---|---|
| a | Insulator, Pin Type | | 1 | | | 1 | 1 | | 1 |
| b | Pin, Pole Top, 20" | | 1 | | | | | | |
| c | Bolt, Machine, 5/8" x Req'd Length | | 2 | 2 | 2 | | | | |
| d | Washer, 2 1/4" Square With 11/16" Hole | | 2 | 2 | 2 | 2 | | | |
| f | Pin, Crossarm, Steel, 5/8" x Req'd Length | | | | | | 1 | | 1 |
| n | Bolt, Double Arming, 5/8" x Req'd Length | | | | | 1 | | | |
| p | Connector | 1 | | | | | | | |
| ap | Clamp, Hot Line | 1 | | | | | | | |
| av | Jumper | 1 | | | | | | | |
| aw | Washer, Spring, 5/8" | | 2 | 2 | 2 | 1 | | | |
| co | Insulator, Post, Clamp Type | | 1 | | | | | | |
| dd | Adapter, Insulator | | | | | 1 | | | |
| ea | Insulator, Post Type | | | | 1 | | | | |
| ea | Insulator, Post Type, 7" Stud | | | | | | | 1 | |
| eb | Bracket, Pole Top | | 1 | | 1 | | | | |
| ek | Locknut, 5/8" | | 2 | 2 | 2 | 3 | | | |

SHEET 1 OF 4

TENNESSEE VALLEY PUBLIC POWER ASSOCIATION

MISCELLANEOUS PRIMARY ASSEMBLIES

RUS EQUIVALENT:
M5-1 TO M5-26

DWG. No. M5

| DATE | REVISION | DATE | REVISION |
|---|---|---|---|
| | | | |

M5.dwg


Cannon&Cannon, Inc.
Consulting Engineers • Field Surveyors
8550 Kingston Pike
Knoxville, Tennessee 37919
Telephone: (865) 670-8555 • Fax: (865) 670-8866
www.cannon-cannon.com


HARRIMAN UTILITY BOARD
300 North Roane Street
Harriman, TN 37748
Phone (865) 882-3242

ELECTRIC RELOCATION
ELECTRIC DETAILS

JEFF L. MEADOW REGISTERED ENGINEER AGRICULTURE COMMERCE No. 23025 STATE OF TENNESSEE

| | |
|---|---|
| CCI NO. | 923-0005 |
| P.I.C. | JEFF MEADOW |
| DRAWN | JNR |
| Q.C. | DM |
| SCALE: 1" = 50' | DATE: 8-29-2014 |

Survey & Design Division

9/5/2014 12:35:29 PM
Z:\00923-0005\UTILITIES\B Date\DGN FILES\ROSR29U2-17.sht