TENNESSEE D.O.T.
DESIGN DIVISION
FILE NO.

| TYPE | YEAR | PROJECT NO. | SHEET NO. |
|---|---|---|---|
| CONST. | 2015 | NH-29(86) | U2-14 |

MORGAN COUNTY 65001-3268-14

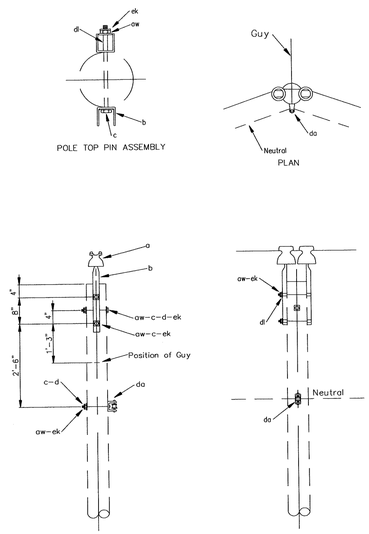


NOTES:
1- Maximum transverse load is 1000 lbs. per conductor

| ITEM | QUANTITY 15kV | QUANTITY 25kV | DESCRIPTION |
|---|---|---|---|
| a | 2 | - | Insulator, Pin Type |
| b | 2 | - | Pin, Pole Top, 20" |
| c | 4 | - | Bolt, Machine, 5/8" x Required Length |
| d | 3 | - | Washer, 2 1/4" Square With 11/16" Hole |
| ow | 4 | - | Washer, Spring, 5/8" |
| da | 1 | - | Bracket, Rigid Clevis, Insulated |
| dl | 2 | - | Pipe Spacer, 3/4" dia. 1 1/2" |
| ek | 4 | - | Locknut, 5/8" |

TENNESSEE VALLEY PUBLIC POWER ASSOCIATION
PRIMARY, SINGLE-PHASE, MEDIUM ANGLE STRUCTURE
DOUBLE PRIMARY SUPPORTS - 15kV ONLY
RUS EQUIVALENT: 15kV: A2
DWG. No. 15kV: A2
DATE | REVISION | DATE | REVISION

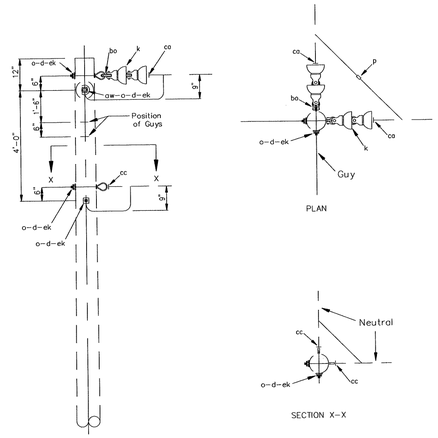


NOTES:
1- Specify items "ca" and "cc" from standard drawings AC-10, AC-11, CU-5, and CU-6.
2- Maximum longitudinal load is lesser of 5000 lbs. per conductor or neutral attachment strength.
3- Specify use of polymer suspension insulator in lieu of porcelain suspension insulator by adding the subscript "P" to the standard number.

| ITEM | QUANTITY 15kV | QUANTITY 25kV | DESCRIPTION |
|---|---|---|---|
| d | 4 | 4 | Washer, Square, Curved, 3" x 3", with 11/16" Hole |
| k | 4 | 6 | Insulator, Suspension, 6" (4- 5 3/4" x 10" may be substituted for 25kV) |
| o | 4 | 4 | Bolt, Oval Eye, 5/8" x Required Length |
| p | - | - | Connectors, As Required |
| bo | 2 | 2 | Shackle, Anchor |
| ca | - | - | Deadend Assembly, Primary (See Note 1) |
| cc | - | - | Deadend Assembly, Neutral (See Note 1) |
| ek | 4 | 4 | Locknut, 5/8" |

TENNESSEE VALLEY PUBLIC POWER ASSOCIATION
PRIMARY, SINGLE-PHASE, DEADEND STRUCTURE
RUS EQUIVALENT: 15kV: A4 25kV: VA4.1
DWG. No. 15kV: A4 25kV: VA4
DATE | REVISION | DATE | REVISION

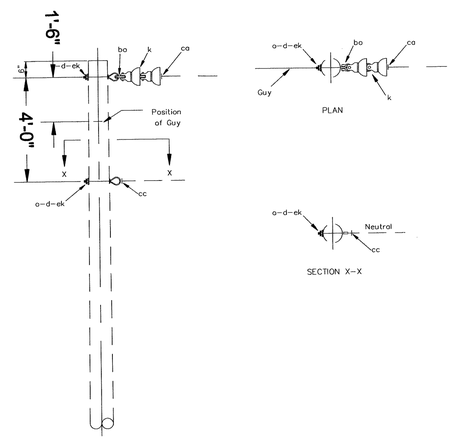


NOTES:
1- Specify items "ca" and "cc" from standard drawings AC-10, AC-11, CU-5, and CU-6.
2- Maximum longitudinal load is lesser of 5000 lbs. per conductor or neutral attachment strength.
3- Specify use of polymer suspension insulator in lieu of porcelain suspension insulator by adding the subscript "P" to the standard number.

| ITEM | QUANTITY 15kV | QUANTITY 25kV | DESCRIPTION |
|---|---|---|---|
| d | 2 | 2 | Washer, Square, Curved, 3" x 3", with 11/16" Hole |
| k | 2 | 3 | Insulator, Suspension, 6" (2- 5 3/4" x 10" may be substituted for 25kV) |
| o | 2 | 2 | Bolt, Oval Eye, 5/8" x Required Length |
| bo | 1 | 1 | Shackle, Anchor |
| ca | - | - | Deadend Assembly, Primary (See Note 1) |
| cc | - | - | Deadend Assembly, Neutral (See Note 1) |
| ek | 2 | 2 | Locknut, 5/8" |

TENNESSEE VALLEY PUBLIC POWER ASSOCIATION
PRIMARY, SINGLE-PHASE, DEADEND STRUCTURE (SINGLE DEADEND)
RUS EQUIVALENT: 15kV: A5 25kV: VA5.1
DWG. No. 15kV: A5 25kV: VA5
DATE | REVISION | DATE | REVISION

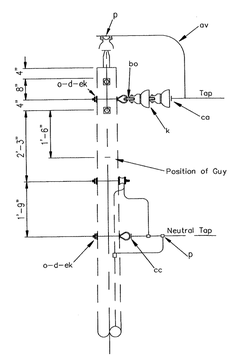


NOTES:
1- Specify items "ca" and "cc" from standard drawings AC-10, AC-11, CU-5, and CU-6.
2- Maximum longitudinal load is lesser of 5000 lbs. per conductor or neutral attachment strength.
3- Specify use of polymer suspension insulator in lieu of porcelain suspension insulator by adding the subscript "P" to the standard number.

| ITEM | QUANTITY 15kV | QUANTITY 25kV | DESCRIPTION |
|---|---|---|---|
| d | 2 | 2 | Washer, Square, Curved, 3" x 3", with 11/16" Hole |
| k | 2 | 3 | Insulator, Suspension, 6" (2- 5 3/4" x 10" may be substituted for 25kV) |
| o | 3 | 3 | Bolt, Oval Eye, 5/8" x Required Length |
| p | - | - | Connectors, As Required |
| av | - | - | Jumpers and Leads, As Required |
| bo | 1 | 1 | Shackle, Anchor |
| ca | - | - | Deadend Assembly, Primary (See Note 1) |
| cc | - | - | Deadend Assembly, Neutral (See Note 1) |
| ek | 2 | 2 | Locknut, 5/8" |

TENNESSEE VALLEY PUBLIC POWER ASSOCIATION
PRIMARY, SINGLE-PHASE
TAP ASSEMBLY
RUS EQUIVALENT: 15kV: A5-1 25kV: VA1.1 & VA5.2
DWG. No. 15kV: A5-1 25kV: VA5-1
DATE | REVISION | DATE | REVISION

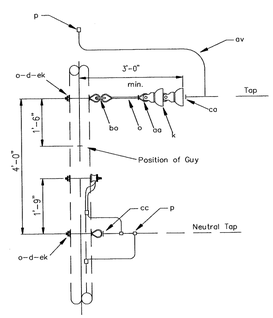


NOTES:
1- Specify items "ca" and "cc" from standard drawings AC-10, AC-11, CU-5, and CU-6.
2- Maximum longitudinal load is lesser of 5000 lbs. per conductor or neutral attachment strength.
3- Specify use of polymer suspension insulator in lieu of porcelain suspension insulator by adding the subscript "P" to the standard number.

| ITEM | QUANTITY 15kV | QUANTITY 25kV | DESCRIPTION |
|---|---|---|---|
| d | 2 | 2 | Washer, Square, Curved, 3" x 3", with 11/16" Hole |
| k | 2 | 3 | Insulator, Suspension, 6" (2- 5 3/4" x 10" may be substituted for 25kV) |
| o | 3 | 3 | Bolt, Oval Eye, 5/8" x Required Length |
| p | - | - | Connectors, As Required |
| aa | 1 | 1 | Nut, Oval Eye, 5/8" |
| av | - | - | Jumpers and Leads, As Required |
| bo | 1 | 1 | Shackle, Anchor |
| ca | - | - | Deadend Assembly, Primary (See Note 1) |
| cc | - | - | Deadend Assembly, Neutral (See Note 1) |
| ek | 2 | 2 | Locknut, 5/8" |

TENNESSEE VALLEY PUBLIC POWER ASSOCIATION
PRIMARY, SINGLE-PHASE
TAP ASSEMBLY
RUS EQUIVALENT: 15kV: A5-2 25kV: VA5.2
DWG. No. 15kV: A5-2 25kV: VA5-2
DATE | REVISION | DATE | REVISION

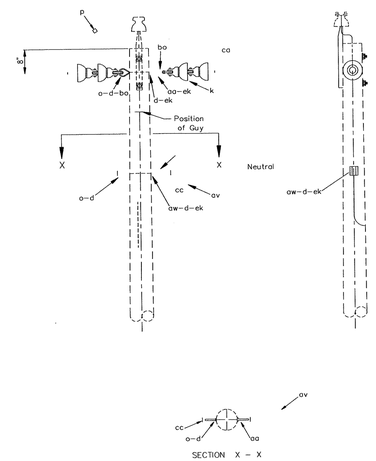


SECTION X - X

NOTES:
1- Specify items "ca" and "cc" from standard drawings AC-10, AC-11, CU-5, and CU-6.
2- Maximum longitudinal load is lesser of 5000 lbs. per conductor or neutral attachment strength.
3- Specify use of polymer suspension insulator in lieu of porcelain suspension insulator by adding the subscript "P" to the standard number.

| ITEM | QUANTITY 15kV | QUANTITY 25kV | DESCRIPTION |
|---|---|---|---|
| d | 2 | | Washer, 2 1/4" Square with 11/16" Hole |
| k | 4 | | Insulator, Suspension, 6" (4- 5 3/4" x 10" may be substituted for 25kV) |
| o | 2 | | Bolt, Oval Eye, 5/8" x Required Length |
| p | - | | Connectors, As Required |
| av | - | | Jumpers and Leads, As Required |
| ca | - | | Deadend Assembly, Primary (See Note 1) |
| cc | - | | Deadend Assembly, Neutral (See Note 1) |
| ek | 2 | 2 | Locknut, 5/8" |

TENNESSEE VALLEY PUBLIC POWER ASSOCIATION
PRIMARY, SINGLE-PHASE
VERTICAL DEADEND STRUCTURE (DOUBLE DEADEND)
RUS EQUIVALENT: 15kV: A6 25kV: VA6.1
DWG. No. 15kV: A6
DATE | REVISION | DATE | REVISION

VA5.dwg


Cannon&Cannon, Inc.
Consulting Engineers • Field Surveyors
8550 Kingston Pike
Knoxville, Tennessee 37919
Telephone: (865) 670-8535 • Fax: (865) 670-8866
www.cannon-cannon.com


HARRIMAN UTILITY BOARD
300 North Roane Street
Harriman, TN 37748
Phone (865) 882-3242

ELECTRIC RELOCATION
ELECTRIC DETAILS

JEFF L. MEADOW REGISTERED ENGINEER STATE OF TENNESSEE

| | |
|---|---|
| CCI NO. | 923-0005 |
| P.I.C. | JEFF MEADOW |
| DRAWN | JNR |
| Q.C. | DM |
| SCALE: 1" = 50' | DATE: 8-29-2014 |

9/5/2014 12:30:48 PM
Z:\00923-0005\UTILITIES\B Date\DGN FILES\ROSR29U2-14.sht

Survey & Design Division