TENNESSEE D.O.T.
DESIGN DIVISION
FILE NO. ---

| TYPE | YEAR | PROJECT NO. | SHEET NO. |
|---|---|---|---|
| CONST. | 2015 | NH-29(86) | U5-22 |
| | | | |
| | | | |
| | | | |

MORGAN COUNTY 65001-3268-14

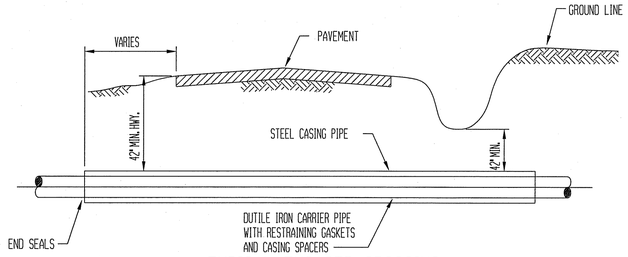


## TYPICAL ENCASED CROSSING
(PULL THROUGH CASING)

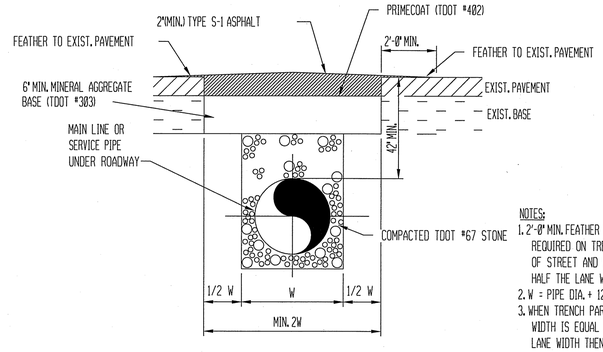


## TYPICAL ASPHALT PAVEMENT REPLACEMENT OPEN CUT STREETS & DRIVEWAY CROSSINGS

NOTES:
1. 2'-0" MIN. FEATHER TO EXIST. PAVEMENT NOT REQUIRED ON TRENCHES THAT PARALLEL THE ℄ OF STREET AND WHEN THE WIDTH IS LESS THAN HALF THE LANE WIDTH.
2. W = PIPE DIA. + 12"
3. WHEN TRENCH PARALLELS CENTERLINE OF STREET AND WIDTH IS EQUAL TO OR GREATER THAN HALF THE LANE WIDTH THEN OVERLAY ENTIRE LANE WIDTH.
4. ALL PAVEMENT TO BE SAW CUT.
5. FOR CONCRETE STREETS/DRIVEWAYS, SAW CUT EXISTING CONCRETE & BACKFILL WITH FLOWABLE FILL FOR STREET AND COMPACTED T.D.O.T. #67 STONE FOR DRIVEWAYS TO WITHIN 4 INCHES OF FINISHED GRADE AND INSTALL ½" EXPANSION JOINT (ONE SIDE), AND FORM AND PLACE 4000 PSI CONCRETE. FINISH TO MATCH EXISTING SURFACE.
6. CONCRETE CURBS/CURB AND GUTTER TO BE REPLACED TO MATCH EXISTING.

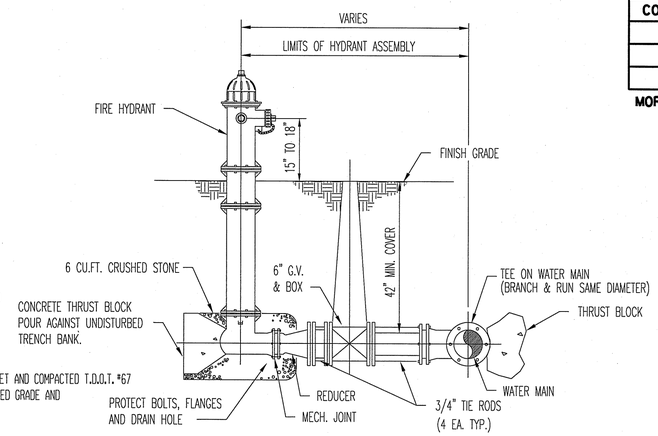


## TYPICAL HYDRANT ASSEMBLY

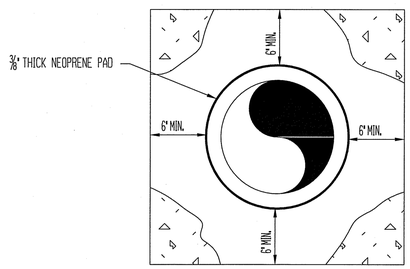


NOTE:
CONCRETE - f'c = 2,500 psi

## TYPICAL CONCRETE ENCASEMENT

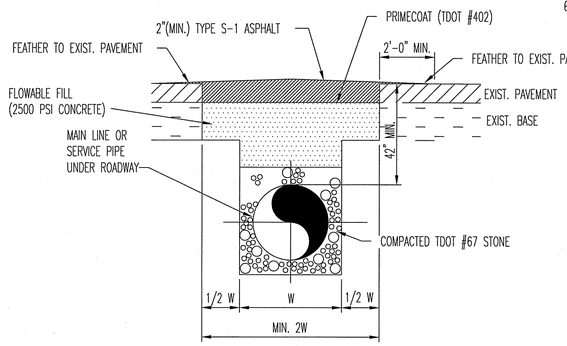


## TYPICAL ASPHALT PAVEMENT REPLACEMENT OPEN CUT STREETS & DRIVEWAY CROSSINGS ON STATE HIGHWAY R.O.W.

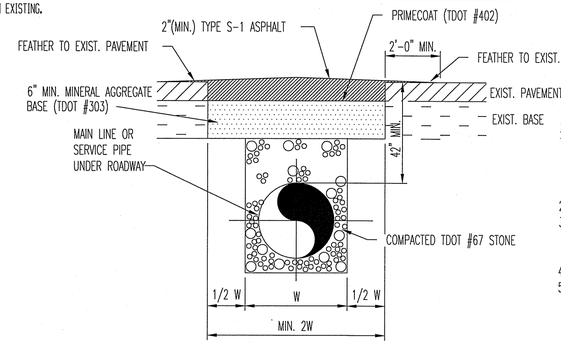


## TYPICAL ASPHALT PAVEMENT REPLACEMENT OPEN CUT STREETS & DRIVEWAY CROSSINGS NOT ON STATE HIGHWAY R.O.W.

NOTES:
1. 2'-0" MIN. FEATHER TO EXIST. PAVEMENT NOT REQUIRED ON TRENCHES THAT PARALLEL THE ℄ OF STREET AND WHEN THE WIDTH IS LESS THAN HALF THE LANE WIDTH.
2. W = PIPE DIA. + 12"
3. WHEN TRENCH PARALLELS CENTERLINE OF STREET AND WIDTH IS EQUAL TO OR GREATER THAN HALF THE LANE WIDTH THEN OVERLAY ENTIRE LANE WIDTH.
4. ALL PAVEMENT TO BE SAW CUT.
5. FOR CONCRETE STREETS/DRIVEWAYS, SAW CUT EXISTING CONCRETE & BACKFILL WITH FLOWABLE FILL FOR STREET AND COMPACTED T.D.O.T. #67 STONE FOR DRIVEWAYS TO WITHIN 4 INCHES OF FINISHED GRADE AND INSTALL ½" EXPANSION JOINT (ONE SIDE), AND FORM AND PLACE 4000 PSI CONCRETE. FINISH TO MATCH EXISTING SURFACE.
6. CONCRETE CURBS/CURB AND GUTTER TO BE REPLACED TO MATCH EXISTING.

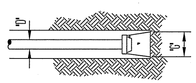


PLAN

NOTES:
1) ALL CONCRETE TO BE CLASS "B" 2500 P.S.I.
2) BUTTRESS DIMENSIONS SHOWN ARE MINIMUM. DIMENSIONS BASED UPON SOIL BEARING PRESSURE OF 3000 P.S.F. AND STATIC WATER PRESSURE OF 150 P.S.I. CONCRETE MUST BEAR AGAINST UNDISTURBED SOIL.

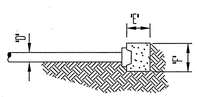


SECTION

| BUTTRESS FOR HORIZONTAL CAPS | | | | | | |
|---|---|---|---|---|---|---|
| D | 6" | 8" | 10" | 12" | 16" | 20" |
| E | 6" | 8" | 8" | 10" | 1'-0" | 1'-4" |
| F | 1'-0" | 1'-4" | 1'-8" | 2'-0" | 2'-8" | 3'-3" |
| G | 1'-5" | 1'-11" | 2'-5" | 2'-10" | 3'-9" | 4'-9" |

## BUTTRESS FOR CAPS

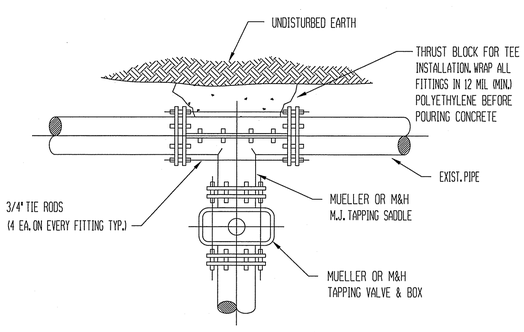


## TYPICAL TAPPING SADDLE AND VALVE INSTALLATION

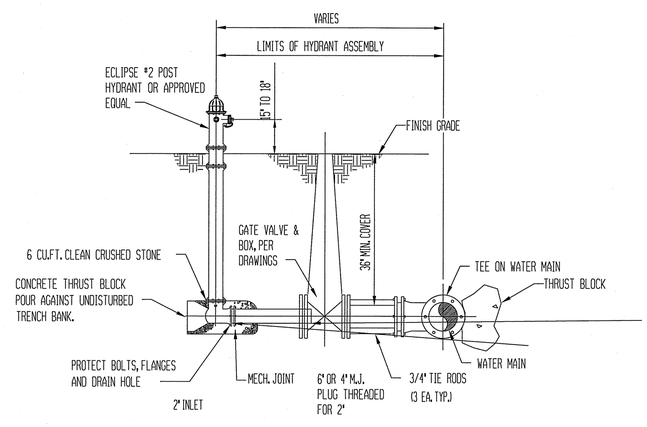


## TYPICAL BLOWOFF HYDRANT ASSEMBLY

NOTES:
1. ALL PIPE WITHIN THE LIMITS OF CREEK CROSSINGS SHALL BE RESTRAINED DUCTILE IRON PIPE WITH FIELD LOCKING GASKETS.
2. STANDARD FACTORY SUPPLIED CONNECTION PIECES SHALL BE USED TO TRANSITION TO MAINLINE WATERLINE PIPE BEYOND THE CROSSING LIMITS.
3. BACKFILL SHALL BE NATIVE MATERIAL EXCAVATED FROM THE TRENCH, WHEN DETERMINED SUITABLE BY THE ENGINEER. SHOULD NATIVE EXCAVATED MATERIAL NOT BE SUITABLE FOR ACTUAL CONTACT WITH THE SUBAQUEOUS PIPE, A MINIMUM 6" ENVELOPE OF ASTM #8 STONE SHALL BE USED FOR BEDDING WITH NATIVE EXCAVATED MATERIAL USED TO COMPLETE THE TRENCH BACKFILL.
4. SEE ARAP PERMIT AND SWPPP FOR FURTHER DETAILS.
5. CENTER JOINT OF DUCTILE IRON PIPE IN CREEK FOR 18' LONG CREEK CROSSING.

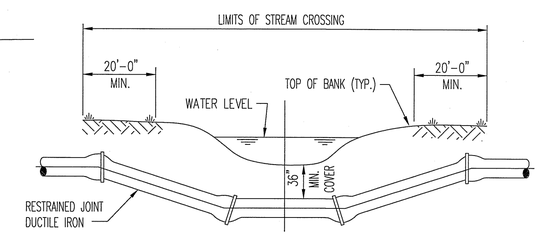


## TYPICAL CREEK CROSSING

STATE OF TENNESSEE
DEPARTMENT OF TRANSPORTATION
BUREAU OF PLANNING & DEVELOPMENT

# TYPICAL DETAILS

N.T.S.

$$$$SYTIME$$$$$$
$$$$DGNSPEC$$$$$$

Survey & Design Division